Assessment of the Impacts of Power Factor Correction in Computer Power Supplies on Commercial Building Line Losses

Prepared by:

Brian Fortenbery
Engineering Manager
EPRI Solutions, Incorporated (ESI)
bfortenbery@eprisolutions.com

Jonathan G. Koomey, Ph.D.
Staff Scientist at Lawrence Berkeley National Laboratory
jgkoomey@stanford.edu

Prepared for the California Energy Commission
Contract # 500-04-030, Brad Meister, Contract Manager
March 31, 2006

Executive Summary

As electric utility interest in cost effective opportunities to reduce electrical consumption has grown, attention is increasingly turning to the electronic products previously classified as "miscellaneous load" or "plug load." These devices include a wide range of products operating on ac-dc power supplies, such as computers, monitors, printers, copiers, cordless and cellular phones, battery chargers, and various types of audio/video equipment.

While some efforts are underway to improve the whole-product energy efficiency of these devices, much of the early attention has been focused on their power supplies. Power supplies are the common denominator for these products – the first link in the chain of their power flow, and one typically responsible for 20 to 70% of all the energy the electronic products consume. With more than 3.5 billion power supplies currently in use in the United States, the opportunity is sizeable – about 3 to 4% of all U.S. electricity is consumed in the power supply conversion process.

While efforts are underway to improve power supply efficiency through standardized test methods, voluntary labeling programs, and mandatory efficiency standards, parallel discussions are addressing whether or not to include power factor correction (PFC) in the high efficiency designs. Power factor is a measure of the efficiency with which a load uses the current supplied to it. Motors, for instance, have less than perfect power factor because they are inductive loads, which means they take more current than just the amount required to do the actual work of spinning a load. This additional current is required to *magnetize* the windings in the motor, without which the motor could not rotate.

In a similar fashion, the power supplies in question draw more current than required for the DC load on their output. This is because of harmonics that are inherent in the power supply current, due to their design. However, this can be corrected using PFC circuitry at the front end of the power supply – an approach required in Europe and Japan for high wattage devices. In so doing, the current flowing in the building wiring is reduced, and this in turn can reduce heating effects from that current.

This study first assesses the energy-saving benefit of improved efficiency in computer power supplies. It then extends that analysis to consider any additional energy savings resulting from power factor correction in the computer itself and in the building wiring that distributes power to the computer. The resulting impacts are tallied per computer, for the state of California as a whole, and for the United States.

The analysis showed that the use of high efficiency computer power supplies will result in three effects:

1. **Direct savings from using a more efficient power supply.**

This is the original intent of using 80 PLUS[1] power supplies, and is the most significant effect.

2. **Indirect savings in wiring due to lower current requirement of more efficient power supply.**
   This is a side effect of high efficiency loads, and while it is relatively small, it is still real and measurable (and has usually been ignored in past analyses).
3. **Indirect savings in wiring due to power factor correction.**
   This is a known and measurable effect of PFC loads, larger than the indirect savings from higher efficiency and a significant added savings of energy.

The charts below show some of those results, indicating the rising significance of cable and PFC savings as building distribution wiring becomes longer:

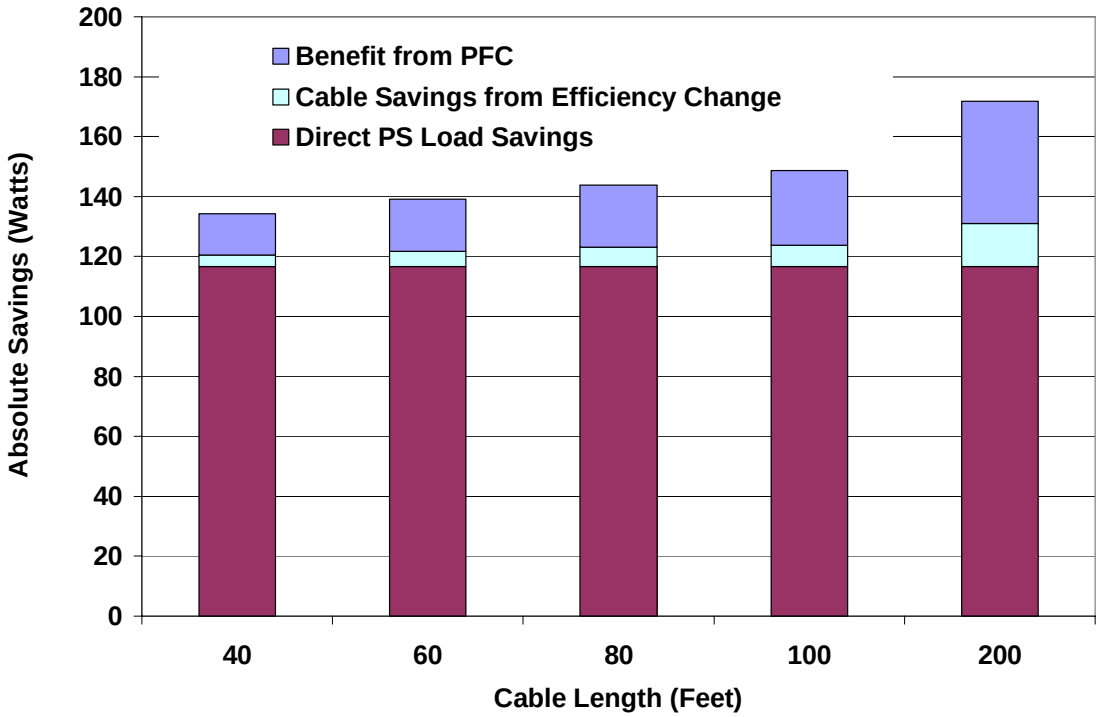

Figure ES-1
Comparison of Absolute Savings from PFC and Efficiency Improvement

[1] 80 PLUS is a utility-funded energy efficiency program offering financial incentives to computer manufacturers that install power supplies with a minimum efficiency of 80% and power factor correction. See www.80plus.org.

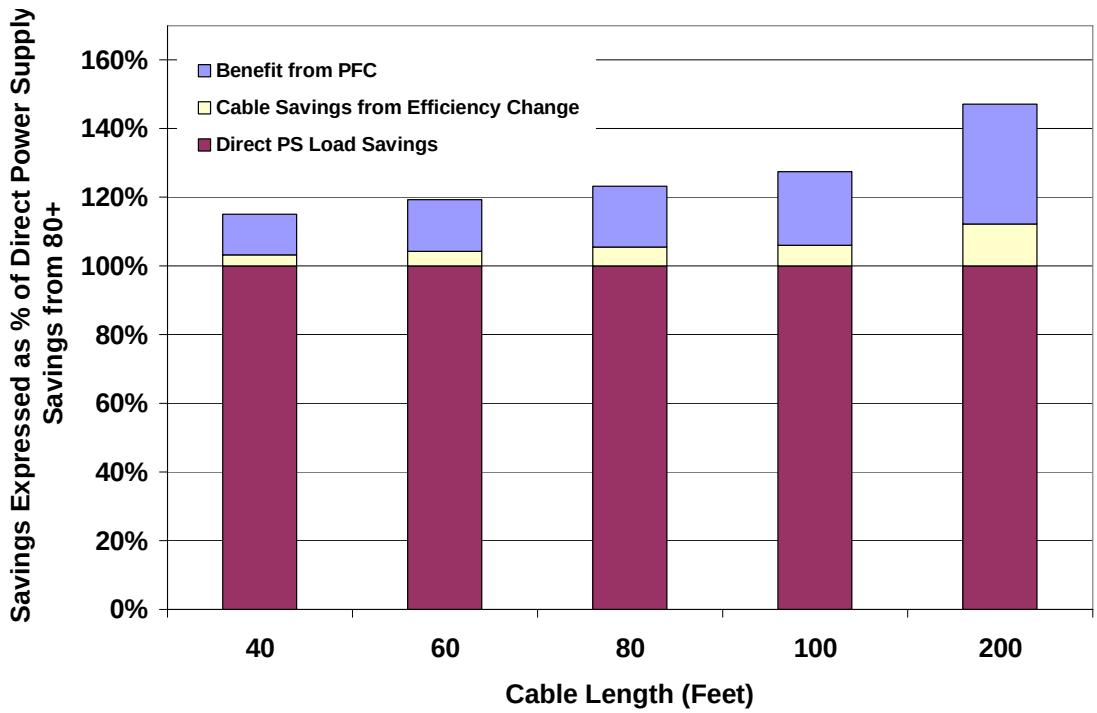

Figure ES-2
Comparison of Savings from PFC and Efficiency Improvement in Percent

Power factor correction adds another 12 to 21% to the resulting energy savings, based on the cable lengths typically found in residential and commercial buildings (40 feet and 100 feet, respectively). The analysis also translates these results into the amount of energy that can be saved in a typical building power distribution system as a result of PFC in power supplies. The results indicate that about 2.8% of a commercial building's overall electricity consumption can be saved through PFC. However, this estimate is conservative, since it assumes that computers are the only loads in the building. The existence of other loads would increase the original current, and increase the absolute savings (see page 21).

The analysis then extrapolates to determine the amount of energy savings possible in the state of CA and the U.S. The results indicate that additional savings from PFC in California could be nearly 300 million kWh per year, while for the entire country, they could be as high as 2.4 million kWh per year.

Finally, there are some non-energy benefits associated with PFC that should be taken into account during the efficiency initiative. These are outlined in the final section of the report.

Introduction

There are three major types of electric loads in commercial buildings—resistive, reactive, and nonlinear. Resistive loads are those from incandescent lamps and electric resistance heaters. Reactive loads are typically inductive, such as electric motors that might be found in pumps and compressors. Nonlinear loads, which are normally powered by ac-dc switching power supplies, are typical in a wide range of electronic devices, such as computers, monitors, televisions, printers, fax machines, copiers, audio equipment, and telecommunications equipment. ASHRAE estimates that these plug loads now represent 10 to 30% of total energy use in efficient commercial buildings, depending on climate.[2] About 3.5 billion power supplies are now in use in the United States, and roughly 3 to 4% of all U.S. electricity is consumed in these devices before ever reaching the intended dc loads.[3]

The effect of nonlinear loads on the power system and energy use is growing in significance as mandatory efficiency standards and utility incentive programs drive steady improvements in the efficiencies of lighting, heating, and motors. Desktop computers are a particularly significant source of nonlinear loads, now representing more than 10 billion kwh and more than $7 billion of annual electricity consumption in the commercial sector.[4] Power supplies for computers draw current at frequencies different from that of the usual electrical power grid. Typically, source voltage is 120 V at 60 Hz, while power supplies draw currents that include odd multiples of 60 Hz (harmonics).

In commercial systems, most harmonic currents (currents drawn at frequencies that differ from the frequency of the source) are caused by nonlinear loads. Many electronic devices draw nonlinear loads because they use solid-state rectifiers at their inputs and filter capacitors after the rectifiers. An example of this type of circuit is a personal computer (PC) power supply, as shown in Figure 1.

---

[2] See Donald G. Collier and Ronald E. Jarnagain, "Advanced Energy Design Guide for Small Office Buidlings, " *ASHRAE Journal*, March 2005, pp. 5-6.
[3] See Ecos Consulting, *Power Supply Efficiency: What Have We Learned?*, prepared for the California Energy Commission's Public Interest Energy Research program, February 2004.
[4] See Michael Thelander, "Desktop Energy Users Add to Energy Bills," *Energy and Power Management*, February 26, 2004.

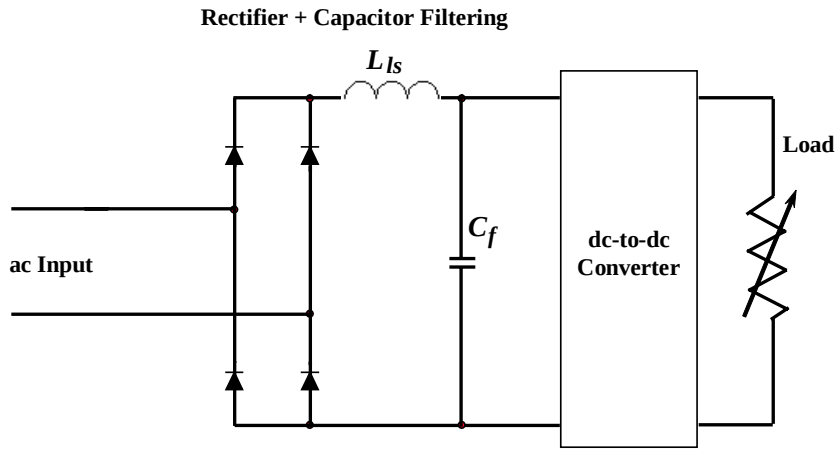

Figure 1
Schematic of Personal Computer Power Supply

Solid-state rectifiers inherently draw current in pulses when the ac line voltage is higher than the voltage across the filter capacitor used with the rectifier. As shown in Figure 2, the waveform of the current does not mimic that of a sine wave but yields significant harmonics. The harmonic spectrum plot shows the presence of odd harmonics, with relatively large magnitudes at the lower frequencies. As the frequency increases, the magnitudes decrease.

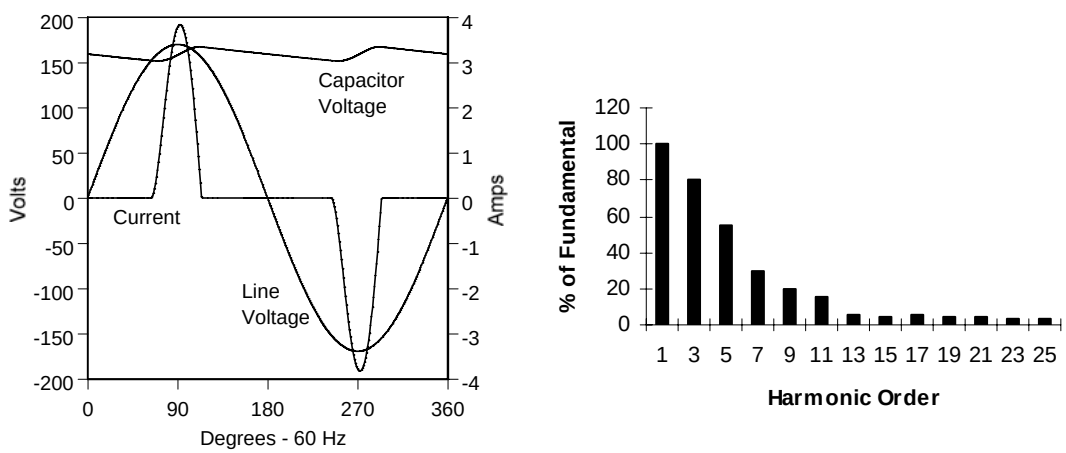

Figure 2
Current and Harmonic Spectrum for Computer Power Supply

The PC power supply is only one of many possible harmonic producers in the 120-V range. Other loads that inject harmonic currents include office equipment for communications, printers and copiers, and fluorescent lighting with high-efficiency electronic ballasts. Nonlinear loads in the 480-V range include larger computers, uninterruptible power supplies, adjustable-speed drives for HVAC systems; and 277-V lighting systems.

Harmonic currents are not produced by the source but are a result of the nonlinear loads. As nonlinear loads become more and more prevalent, the effect on the power system becomes increasingly pronounced. Because the harmonic currents are a result of the nature of the loads, it is appropriate to consider the load itself to be a source of harmonic current. As harmonic components are injected back into the system, the resulting voltage drops across the cable (at the corresponding frequencies) along with the source impedance upstream creates voltage distortion in the power system. Figure 3 shows the wiring system of a typical commercial office building, along with its voltage and current profiles under mixed linear and nonlinear loads. The most significant harmonic producers in this system are the switch-mode power supplies (SMPS) used in PCs. While fluorescent ballasts represent nonlinear loads also, their harmonic contribution is limited by agreement of the manufacturers. Other loads, such as printers and copiers, are greatly outnumbered by the PCs, and three phase loads, such as motor drives, are typically limited in number in commercial buildings.

As can be seen in Figure 3, voltage is more distorted at points closest to the load and farthest from the grid power source. This voltage distortion is a direct function of both the current harmonic component magnitudes and the impedance in the system (cables and transformers). Figure 3 is based on the model in Figure 9-12 of ANSI/IEEE 1100, the Emerald Book, “IEEE Recommended Practice for Powering and Grounding Sensitive Electronic Equipment”. Values shown in Figure 3 are based on engineering experience, namely measured values from hundreds of site investigations over tens of years.

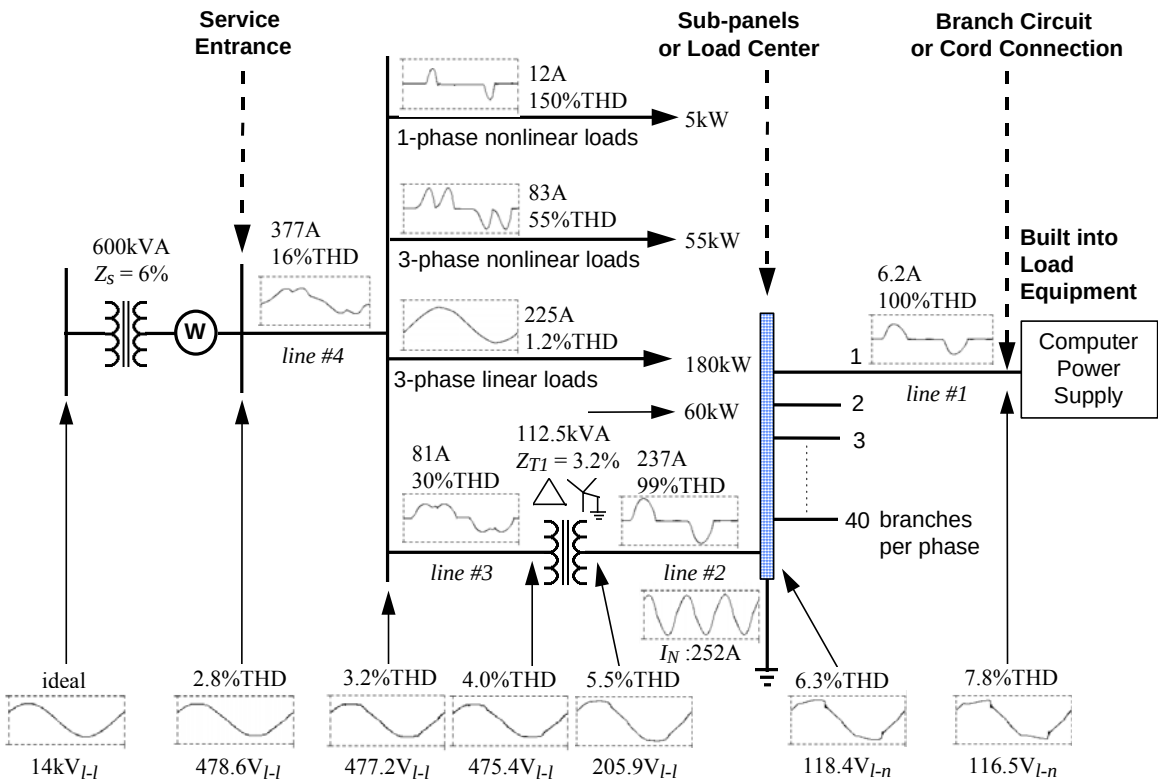

Figure 3
Commercial Building Distribution System

Referring to Figure 3, line segment #1 is a 20-A branch circuit feeding single-phase computer loads. The total harmonic distortion (THD) of the current on each branch circuit is about 100%. The THD on line segment #2 is similar at 99%. Line segment #2 is a three-phase feed from the delta-wye (Δ-Y) transformer secondary. The loads on different phases share the neutral, which carries a significant amount of third harmonic current. The third harmonic current, combined with other harmonics that are multiples of three times the fundamental, are known as triplen harmonics. Triplen harmonics do not cancel but rather add in the neutral, resulting in a neutral current larger than the phase current. As long as the loading is balanced, the triplens are trapped in the delta windings and cannot show up in the primary line current of the Δ-Y transformer; thus, the current THD is reduced to 30% at the primary. When the system is unbalanced, the triplen harmonics are completely trapped, and some amount will show up on the primary.

Line segment #4 of Figure 3 has a current THD of 16%. This current represents the combination of all the building loads, both linear and nonlinear. The reduction in THD occurs mostly as a result of the domination of the linear loads. The three-phase linear loads totalling 225 A tend to swamp the nonlinear contribution, thereby reducing the THD on the service entrance feeder.

The distorted current on each line segment interacts with the line inductance, causing voltage distortion. Figure 3 also shows the waveforms, THD, and associated rms values of the voltages and currents in the system. The voltage at the input of the single-phase SMPS load has the highest THD at 7.8%. It also presents a flat-topping of the waveshape, which is a reflection of the rectifier output capacitor voltage. With a typical SMPS design of 5% ripple in the dc-link capacitor voltage, this flat-topping of the voltage waveshape is commonly seen in all electronic loads.

Adjustable speed drives do not represent a large load in this facility, but they do inject a large percentage of harmonic content per kW load. As seen in Figure 3, this current is dominated by the 5th and 7th harmonics, which can increase the rms value of current as well as excite resonant conditions in the system, if they exist in the system.

In the model shown in Figure 3, the upstream system voltages are gradually smoothed by other types of loads, especially linear loads. At the service entrance of the modeled system, the voltage THD is reduced to 2.8%. Note that the source voltage is assumed as ideal, with a 6% equivalent impedance that combines the 600 kVA transformer and the upstream source impedance.

Problems Related to Harmonics

The rms value of the current is given by

$$I = \sqrt{\sum_{h=1}^{\infty} I_h^{\,2}} = \sqrt{I_1^{\,2} + I_2^{\,2} + I_3^{\,2} + \ldots}$$

Where I is the total rms current,

h is the harmonic number,

I_1, I_2, etc, are the current components at the first and second harmonic, etc

I_h is the current component at the hth harmonic

Since the rms value of the current is higher, the heating effect associated with I^2R losses is higher than it would otherwise be. (I^2R is the value of the power consumed in the wiring, where I is the current and R is the resistance in the wire). These losses manifest themselves in a number of specific ways:

- Heating effects in phase conductors as well as neutrals
- Heating in 3-phase, dry-type transformers

- Harmonic voltage related heating in other equipment, such as motors
- Harmonic voltage stress on system capacitors and equipment capacitors
- Resonance with power-factor-correction capacitors
- Voltage distortion at the point of common coupling

Wiring I^2R losses will vary, depending on the length of the line segments, the amount of load traveling through them, and the nature of the load. The distorted current with low power factor leads to relatively higher losses-per-watt of connected load. Without any harmonic compensation, the highly distorted load currents of computer workstations, such as those shown in Figure 1, can lead to losses in the building wiring that are much higher than for undistorted load current. Also, the effectiveness of harmonic elimination methods will be highly dependent on their locations in the building wiring.

These wiring losses are representative of the heating mentioned earlier. While energy use deserves consideration, the more immediate concern is whether the wiring becomes overloaded as a result of the harmonic content of the current. Based on historical data, it is certainly possible to exceed the recommended ampacity of a circuit when nonlinear loads are prevalent.

Neutral conductors in these situations carry triplen harmonics. The reason for this is that for any multiples of the third harmonic, the phase angle is shifted by a corresponding multiple of three. This results in three phasors that are no longer 120 deg out of phase, but are all in phase. All other components of any frequency, including the fundamental, will have some integer multiple of 120 deg between phasors and as such, will cancel each other in the neutral wire. The triplens are, by virtue of this phase shift, zero-sequence components of the current. Therefore, they do not show up on the primary of the Δ-Y transformer but are trapped in the delta windings, which contributes to the heating in the transformer.

Transformer losses are well defined, with derating for harmonics covered in ANSI C57.110. Losses are divided between load and no-load losses. The load losses include I^2R losses and stray losses. It is the stray losses that are most affected by the harmonic content of the current waveform. There are eddy-current losses that cause heating in many transformer parts, but it is the heating in the windings that is of most interest. This heating is proportional to the square of the load current and the square of the frequency, which leads to the notion of a *K factor* promoted by some transformer manufacturers. The K-factor serves as an indication of the additional eddy current heating in the winding. This K factor is given by

$$K = \frac{\sum I_h^2 h^2}{\sum I_h^2}$$

Where h is the harmonic number,
I_h is the hth harmonic component of the current.

The derated transformer current is given by

$$I_{RMS} = \sqrt{\frac{1 + P_{EC-R}}{1 + K * P_{EC-R}}}$$

Where P_{EC-R} represents the rated eddy-current losses for that transformer design.

This K factor takes into account the additional eddy current heating in the windings due to the harmonic components of the nonlinear current.

Motors subjected to harmonic voltages will experience heating due to iron and copper losses at the higher frequencies. The excessive heating will shorten the lifetime of the motor.

Any capacitors in the system, whether for power factor correction or for filtering or snubber applications, will exhibit lower impedance at higher frequencies. This means that for the higher frequency current components, the capacitors will carry increased levels of current. This can lead to blown fuses, increased heating and shortened capacitor life.

Power factor correction capacitors can easily cause a resonant condition. When capacitors are added to a system, there is always some frequency at which the capacitive reactance and the system inductive reactance are numerically equal. The system is said to resonate at that frequency. Depending on how the capacitors are connected with respect to the nonlinear load, this combination of capacitive reactance and inductive reactance could result in a parallel or series resonance. The end result is magnification of currents and voltages at the resonant frequency, if the nonlinear load injects frequencies near the resonant frequency.

Power Factor Correction

One of the impacts of harmonic content in load current is an increase in the rms value of the current, as shown before.

This results in additional heating of the building wiring and transformers. Since the harmonic content also manifests itself in the power factor, power factor can be used as a measure of the level of harmonics as well as a measure of the losses they cause in the power system. These problems can be avoided by the manufacturer through the use of a power factor correction circuit, which effectively removes the harmonics from the power supply current. This type of power supply is called power-factor corrected or PFC. Power factor correction in power systems, at 480 V and higher, is typically associated with shunt-connected capacitors used for reactive compensation and is not the same as that used for power supplies.

The use of PFC power supplies inherently reduces the current in the building wiring and thus reduces the heating or I^2R losses associated with the harmonic-rich currents. It is of great interest to study the topic and develop an understanding of what typical energy savings might be achieved in the building distribution wiring through such an approach. In order to do this, a model was developed and lab tests performed to establish some typical values of possible energy savings. In addition, there are other, non-energy benefits associated with PFC (reduction of harmonics) that are of interest. Both the results of the tests and calculations and the non-energy benefits of interest are outlined in the following sections.

Laboratory Tests

Lab testing was performed to ensure that the theoretical effects of PFC on system wiring losses were reasonable and achievable. In order to determine the energy savings due to PFC loads, the following procedure was adopted. The test was conducted in an environment where the source voltage could be controlled. A total of 24 computer power supplies were chosen for this test—8 units without PFC, (referred to as NPFC), 8 PFC units and 8 80 PLUS units. The 80+ PLUS units are power supplies that achieve an efficiency over 80% at 20%, 50% and 100% load and include power factor correction. Each of the 24 power supplies had identical 200-W output power ratings. All the power supplies were loaded identically; that is, each power supply was loaded with constant resistors on the dc side having total dc power output of 97 W. The 12-V bus was loaded to 72 W (2-ohm resistor) and the 5-V bus was loaded to 25 W (1-ohm resistor). The tests were set up as shown in the diagram below (Figure 4).

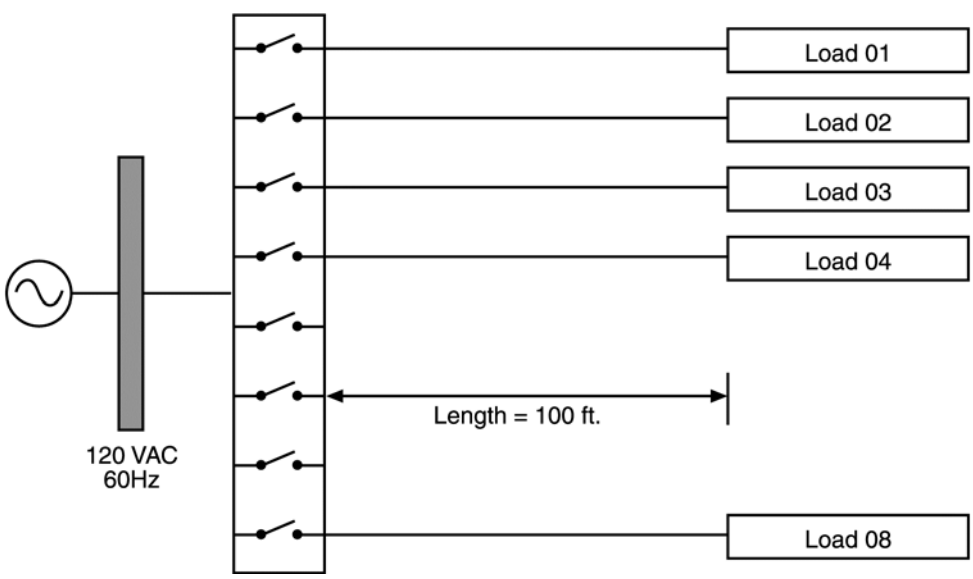

Figure 4
Wiring Diagram for Cable Loss Tests

Measurements were taken first using 8 power supplies without PFC and then again using 8 PFC-equipped power supplies, then finally with 8 80 PLUS power supplies.

Test Results

Test results indicated that while the change in wiring losses is small, there are reductions in the power consumed by the power supply itself.

The loads were carefully controlled to ensure that the output power was the same in all cases. As the line current was reduced, the power factor increased, automatically reducing the power consumed.

In a linear system,

$$P = V_{RMS} I_{RMS} \cos\theta$$

Where θ is the angle between the voltage and the current.

In systems with inductive loads, there is a displacement between the voltage and current given by this angle θ. The cos of this angle is known as the displacement power factor since it depends only on the angle between voltage and current. There is a term known as true power factor, which is equal to the ratio of real to apparent power.

If there is no distortion, true power factor is equal to displacement power factor. In the presence of distortion, however, these two are no longer equal and must be studied further.

The above equation still holds true, although it is more correct to write it as follows:

$$P = V_{RMS} I_{RMS} PF_{TRUE}$$

Where

$$PF_{TRUE} = \frac{PF_{DISP}}{\sqrt{1 + THD_I^{\,2}}}$$

However the single-phase power supplies of interest here are a special case in which the angle between the voltage and current is 0, making the cosine equal to unity. Therefore, any reduction in power factor is due to the presence of harmonic distortion, and so power factor is typically directly related to harmonic distortion in power supplies.

Because all the tested power supplies were intended to operate at the same average efficiency and were driving identical loads, any reduction in power consumption could be attributed to a reduction of harmonics. However, in every measurement, there was a reduction in input power with the same output power. So some of the savings were accomplished in the wiring, as expected, but the majority of the savings occurred at the load. The apparent difference in efficiencies during the testing came from the fact that the 5-V bus on the PFC power supply had a lower limit than the non-PFC power supply. These limits were 12 A for the PFC 5-V bus and 21 A for the non-PFC 5-V bus. As a result, the load on the 5-V bus of the PFC power supply was 5/12=41%, while the load on the 5-V bus of the non-PFC power supply was 5/21=23.8%. This means that the PFC power supply was operating higher up on its efficiency curve and therefore exhibiting a slightly higher efficiency. In the analysis in the appendix, this effect is separated from the PFC effect algebraically.

Table 1 illustrates these findings.

Table 1: Test Results with Constant Resistive Loads

	Input Voltage	Input Current	Power Factor	Input Power (W)		Efficiency			
				At Source	At Load		Loss in Cable (W)	Savings from Cable (W)	Savings from ps load (W)
NPFC	117.81	11.781	0.745	1110.90	P_N = 1054.20	0.7361	L_N = 56.70	NA	NA
PFC	118.76	8.564	0.994	1040	P_P = 1010.90	0.7676	L_P = 29.1	27.6	43.3
80 PLUS	119.12	7.414	0.995	897	P_8 = 875.1	0.8868	L_8 = 21.9	34.8	179.1

These examples indicate the impact that the efficiency improvement has on the savings. The cable savings are much greater when PFC is included—even though they constitute a smaller percentage of the total. In fact, without PFC, the savings would be only 18.5 W, while with PFC savings were calculated as 35.27 W; the PFC doubled the savings in the wiring. These values are tabulated and shown graphically later in this report.
Appendix A contains an analysis of the losses and subsequent savings afforded by use of PFC power supplies as well as 80 PLUS power supplies. One result is that the benefits, or savings can be attributed to three effects:

1. **Savings by virtue of more efficient power supply.**
   This is the original intent of using 80 PLUS power supplies, and is the most significant effect.

2. **Indirect savings in wiring due to lower current requirement of the more efficient power supply.**

This is a side effect of high efficiency loads, and while it is relatively small, it is still real and measurable (and has usually been ignored in past analyses).

3. **Indirect savings in wiring due to power factor correction.**
   This is a known and measurable effect of PFC loads, larger than the indirect savings from higher efficiency and a significant added savings of energy.

The analysis in Appendix A separates these three effects so it is easy to see their relative contribution to the overall savings. The analysis was performed based on actual measured values in the laboratory, showing good correlation with measured results. The tables in the appendix are also based on those measured values.

Our research shows that typical efficiencies today average around 73% for computer power supplies. Typical 80 PLUS power supplies have averaged around 82%, based on certification testing.
The units used in the lab had a better efficiency than one might expect from "typical" 80 PLUS units (nearly 89%), so once the correlation with measured values was established, validating the equations, the equations were used to calculate the relative contributions when "typical" 80 PLUS efficiencies are used. In other words, the equations were used to calculate the savings for a scenario where a 73% efficient power supply is replaced with an 80 PLUS unit with an efficiency of 82% and power factor correction.

The plots below show these contributions effectively, allowing comparison of each of the three separate effects on savings. A table illustrating the effect is included for the 100 ft case.

Table 2: Test and Calculation Results for 100 ft. Case

	Units	NPFC	PFC	80+
Input Data				
Power Supply Efficiency	%	73.00%	76.76%	82.00%
Input Voltage	V	117.81	118.76	119.12
Power Factor	%	74.50%	99.40%	99.50%
Input Current	Amps	11.78	8.56	7.41
Power Input at Source	Watts	1110.90	1040.00	897
Power Input at Power Supply Load	Watts	1054.2	1010.9	875.1
Losses in Cable	Watts	56.7	29.10	21.9
Savings Relative to NPFC Case				
Total Savings **Measured**			70.90	213.90
The Values Below are Calculated Values				
Direct Power Supply Load Savings	Watts	NA	43.26	116.67
Cable Savings from Power Supply Load Saving	Watts	NA	6.24018	7.15
Cable Savings from PFC	Watts	NA	24.849	24.91
Total Calculated Savings	Watts	NA	74.3492	148.73
Savings Expressed as a Percentage of Direct Power Supply Savings				
Direct Power Supply Load Savings		NA	100.00%	100%
Cable Savings from Power Supply Load Savings		NA	14.42%	6%
Cable Savings from PFC		NA	57.44%	21%

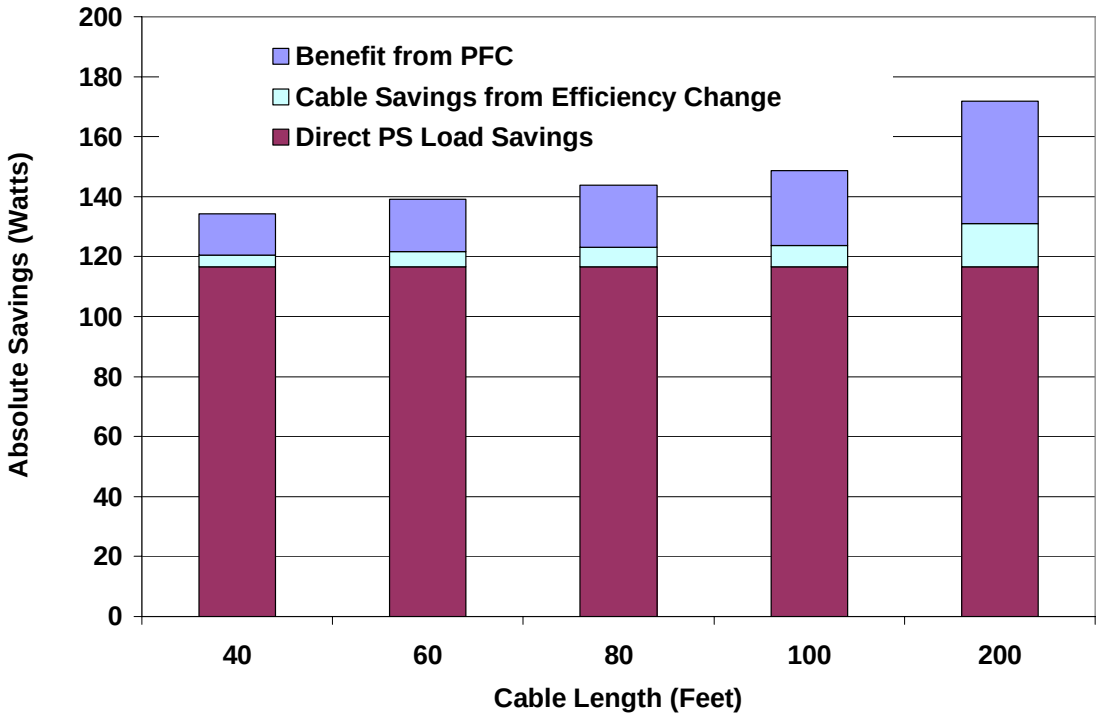

Figure 5
Comparison of Absolute Savings from PFC and Efficiency Improvement

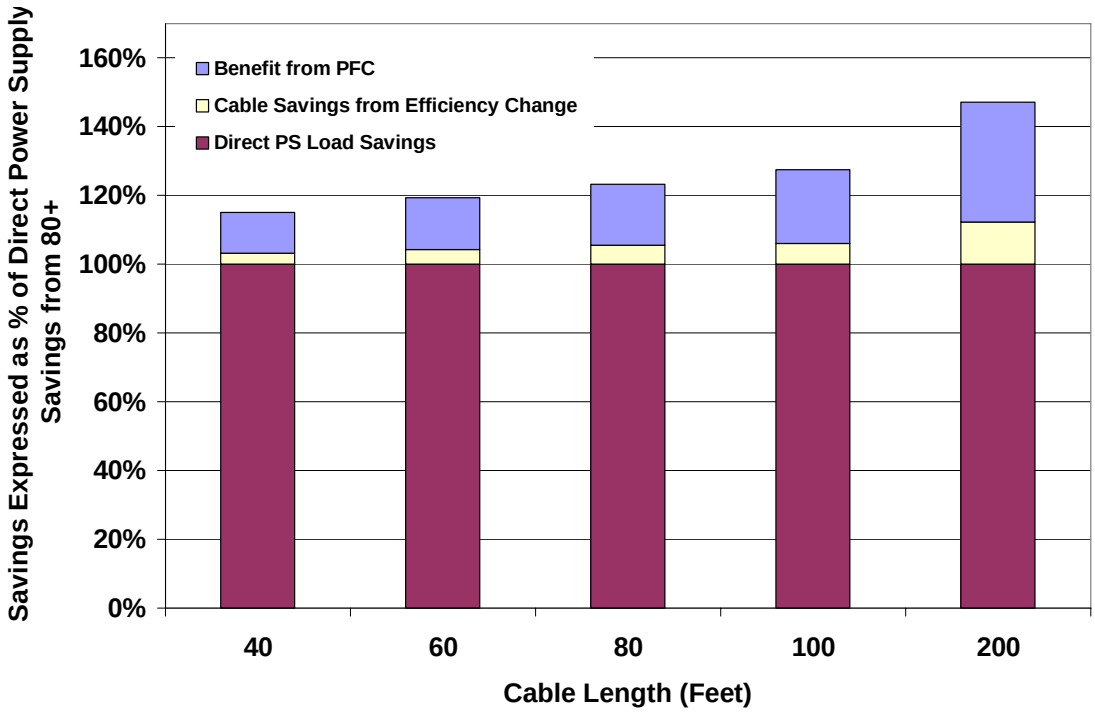

Figure 6
Comparison of Savings from PFC and Efficiency Improvement in Percent

Computer Loads

The data shown in Table 3 were taken using actual computers as the load on the power supplies. This is not a controlled type of load, since the dc power demand of computers changes over time with variations in the workload. In addition, the overall load was smaller, because the computers were in idle mode, consuming around 50-60 W ac each.

Table 3: Test Results with Computer Loads with 100 Feet of Cable

	Input Current	Power Factor	Input Power (W)			
			At Source	At Load	Loss in Cable	Savings from Cable
PC with NPFC	5.3974	0.6882	453.8	P_N = 442.52	L_N = 11.3	NA
PC with PFC	3.5226	0.9739	412.5	P_P = 407.4	L_P = 5.1	6.2

Since these loads were not controlled, the analysis of the previous section is not as straightforward. However, it is easy to see from the table that there is a reduction in line current and an attendant reduction in cable losses.

Modeling the System

A simple model was constructed using an Excel spreadsheet to determine the kind of energy consumption in building wiring that could be expected from using non-PFC power supplies. The model also helps determine the level of energy savings that can be expected from using PFC power supplies.

In the first set of calculations, the testing for the 8 power supplies above was modeled. The test results validated the calculations. After that, a building system was modeled using the same current spectra as the 8 power supplies but with 40 power supplies per phase, for a total of 120 machines. This same number of machines used in [1] is intended to model a typical commercial building using real computer power supply data and characteristics to determine a realistic value for expected energy savings.

The system used for calculations is shown in Figure 7:

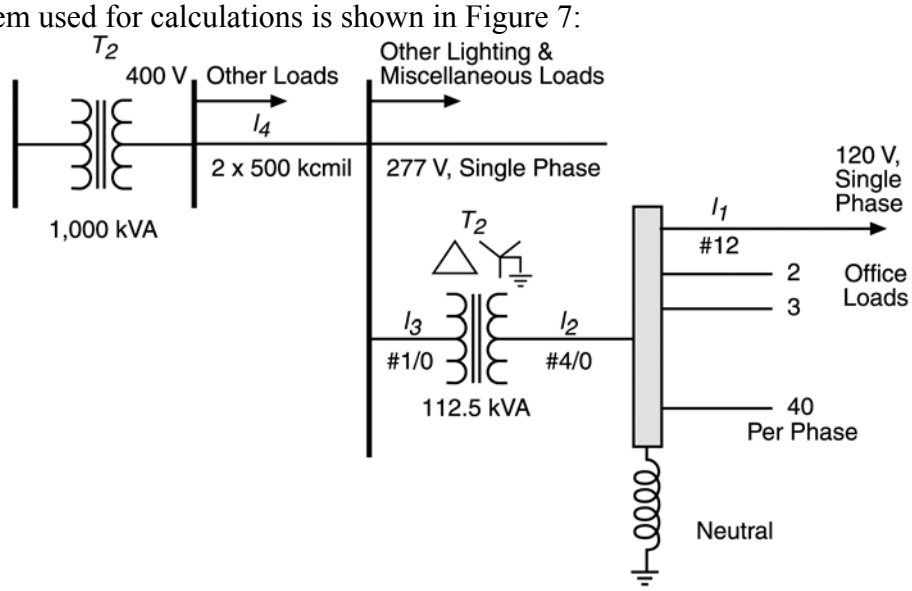

Figure 7 One Line Diagram of Commercial Building Power Distribution System

In this figure, l_1 is the line segment feeding the computer loads. In the first calculation, we simply used 8 machines and a single phase and studied the losses in l_1. With the PFC computers, the losses were reduced and the savings calculated. The calculations matched closely with the measured values, and thus the test results validated the model.

In the next set of calculations, we loaded each phase on the secondary of T_2 with 40 non-PFC machines and found the losses in the cables. For cable larger than 12 AWG,

proximity and skin effects were included[5] The next step was to calculate losses in l_2, then the transformer, T_2. Losses in l_3 were included; but for l_4 it was found that the harmonic content in the current was so small that it did not contribute much to the losses. The total losses are calculated as

$$P_{LossTotal} = P_{l_1} + P_{l_2} + P_{T_2} + P_{l_3}.$$

The total power consumption is calculated as

$$P_{Total} = P_{LossTotal} + P_{Loads}$$

The same set of calculations can be performed for the computers using PFC power supplies. The power consumed in this case will be lower, and the difference between this case and the non-PFC case will be the actual savings, as shown below.

$$P_{Saved} = P_{TotalNPFC} - P_{TotalPFC}$$

The per unit savings will be calculated as

$$P_{Saved\ pu} = \frac{P_{Saved}}{P_{TotalNPFC}}$$

Calculation Results

The first set of calculations was performed for 8 units connected to the branch circuits, shown above as l_1, using 12-AWG wire. The results were slightly different from the test, with a calculated savings of 25.25 W in the cabling when changing the load from non-PFC to PFC power supplies. The actual test showed 27.6 W savings.

When the load was changed to 40 computers per phase, the effect was more dramatic. Savings per phase in this scenario were calculated to be 126.27 W. This is an increase by a factor of 5, since the number of computers went from 8 to 40, which is a factor of 5. It should be noted that the additional computers were considered to be added to separate branch circuits, 8 machines per circuit. Line segment l_2 had three-phase conductors and a shared neutral, typically located in the electrical room from the transformer secondary to the branch circuit breaker panel. These runs may be on the order of 25-ft long. In this segment for linear loads, since the phase conductor currents typically cancel, the neutral

[5] D. E. Rice, "Adjustable speed drive and power rectifier harmonic—their effect on power systems components," *IEEE Trans. on Ind. Appl.*, Vol. IA-22, No. 1, Jan./Feb. 1986, pp. 161—177.

current will be close to zero. Indeed, as long as the load is balanced, it will be exactly zero. However for nonlinear loads and distorted currents, the harmonics that are multiples of three do not cancel in the neutral. The reason for this is that for any multiples of the third harmonic, the phase angle is shifted by a corresponding multiple of three. This resulted in three phasors that were no longer 120 deg out of phase, but were all in phase. For l_2, the calculated savings were nearly 41 W. This included all three phases, and assumed that the neutral carried the triplen harmonics, since they do not cancel. So, the calculation uses the full current spectrum for losses in the phase conductors and only the triplen harmonics for the losses in the shared neutral.

As described in[6, 7] the current in l_3 will have less distortion due to attenuation and cancellation. For this reason, the current distortion is reduced from 72% to 13% for calculation purposes. For l_3, the calculated savings were less, since there is some cancellation and attenuation of the harmonics at this level. The calculated savings were just less than 6 W.

For T_2, the power losses were calculated for I^2R, as well as for eddy current losses, P_{EC}.

The model includes a 50-kVA transformer, for which the rated current is 138 A. For the 40 computers connected per phase, each are loaded to about 50% (a realistic value), the full load current is nearly 60 A for non-PFC power supplies.

Transformer losses can be described as the sum of no load losses and load loss.

$$P_T = P_{NL} + P_L$$

Load loss can be divided between copper loss, or I^2R loss, and stray losses, which include stray loss in windings (mostly eddy current loss, or P_{EC}) and other stray losses (in components other than windings, P_{OSL}).

$$P_L = I^2R + P_{EC} + P_{OSL}$$

To calculate losses, we assumed that the 60 Hz I^2R losses were 1% of the loading on the transformer at full load and the rated eddy current losses, $P_{EC\text{-}R}$, were 5% of the I^2R loss. A conservative result will be reached if the other stray losses, $P_{OSL,}$ are neglected. The no load losses can be estimated as approximately 100 W for a transformer of this size. However, the no load losses do not change with load or harmonics. If the transformer

---

[6] T. Key and J. S. Lai, "Cost and Benefits of Harmonic Current Reduction for Switch-Mode Power Supplies in a Commercial Building," *Conf. Rec. of IEEE IAS Annual. Mtg.*, Orlando, FL, Oct. 1995, pp. 1101–1108.

[7] A. Mansoor, et al, "Predicting the net harmonic currents produced by large numbers of distributed single-phase computer loads," *Conference Record: IEEE PES Winter Power Conference*, Jan. 1995, #95 WM 260-0 PWRD.

were 100% loaded with linear load and fully compensated, the current would be 138 A, corresponding to 50 kW. This is used to define the baseline case for the transformer resistance. So at 138 A, we have 500 W load loss (I^2R loss), therefore R=0.0263 Ω.

With the non-PFC power supplies, the load current was 58.9 A, and the copper losses were 91.2 W. With the PFC power supplies, the load current decreased to 42.9 A, and the copper losses decreased to 48.2 W.

For the eddy current losses, the rated value at compensated load would be 5% of 48.2 W, or 2.41 W. The effect of the presence of harmonics is calculated using the K factor, as before:

$$K = \frac{\sum I_h^2 h^2}{\sum I_h^2}$$

In this case, the K factor is calculated to be 5.87, so when the effect of the harmonics is included, the eddy current losses increase to about 14.1 W.

The total transformer losses with non-PFC power supplies are 100 + 91.2 + 14.1 = 205.3 W. If PFC power supplies are used, the total is 100 + 48.2 + 2.41 = 150.6 W.

The results of these calculations are tabulated as follows, where the total system losses are computed by summing each cable segment loss and the transformer loss. The total savings are taken from this result by comparing total system losses for non-PFC and PFC power supplies. The total savings do not include the improvement in load power consumption, since the intent here is to see the savings in the cable and transformer due to reduction in harmonics. Likewise, transformer no-load losses do not affect the savings amount, since they are fixed for all loads.

Table 4: Calculation of Total System Losses

Component	Power Consumption (W)		
	With NPFC	With PFC	Difference
Loads	15813	15163	650
L_1	804.28	425.47	378.82
L_2	64.22	22.72	41.49
L_3	27.49	22.41	5.08
T_2	205.3	150.6	54.7
Total	16914.29	15784.2	480.09

The overall savings possible as a percent of the total original power consumption is 2.84%. This is a reasonable estimate of the amount of power (energy) that can be saved by applying PFC power supplies in computer loads.

Estimating aggregate savings from PFC in California and the U.S.

Table 5 estimates the total potential energy savings if all desktop PC power supplies incorporated PFC in California and the U.S. A real program to capture these savings would need to estimate stock turnover and other parameters. For purposes of estimating the order of magnitude of the potential savings, however, an instantaneous approach is sufficient. Since 80 PLUS-compliant units are just beginning to reach the market in significant numbers in 2006, we assume a base case market share of zero.

Table 5 uses data on total U.S. stocks of desktop computers in residential and commercial buildings and then estimates the California stocks by scaling with population. Electricity savings per computer are taken from the 80 PLUS web site (http://www.80plus.org/utlmrkt/energytables.html). These savings include assumptions about typical loading for the power supplies in operation in commercial and residential applications.

The results (in terms of savings from PFC) in Tables A1 to A5 in Appendix A are expressed here as a percentage of the direct savings from the efficiency improvements in 80 PLUS power supplies. They are also summarized in Figure 6 (above). For residential applications, we use the results for 40-ft cables; and for commercial applications, we use the results for 100-ft cables.

In the 100-ft case in Table 2, (which we consider to be typical for small commercial buildings but conservative for large ones), savings are 21% of direct efficiency savings. So for every kilowatt-hour of direct savings from the more efficient 80 PLUS power supply, there is an additional 0.21 kWh of savings from the PFC.

We have also included estimates of the savings in cable losses associated with the improvement in power supply efficiency (that efficiency improvement reduces current flow and therefore reduces cable losses). This factor is not relevant to the decision over whether to include PFC in a power supply specification but is an additional source of savings that has not heretofore been included in economic assessments of improving the efficiency of power supplies.

The savings included here only include savings from what is, in the above discussion, called L1. The additional savings from L2, L3, and T2, which are calculated using the model and shown in Table 3, are not currently included. They would increase the PFC savings by a factor of about one third.

This is a conservative estimate, because it neglects other loading that might be on the same cable, such as laser printers, copiers, and monitors. Because losses are proportional to the square of the rms current, the incremental change in losses is twice the present loading level.

$$\frac{dP_C}{dI} = \frac{dI^2 R_{CABLE}}{dI} = 2IR_{CABLE}$$

For example, if the load were 10 A, and were reduced by 1 A, the difference in losses (savings) would be

$$10^2 R - 9^2 R = 19R \text{ watts}$$

But if the load were 25 A, and were reduced by 1 A, the savings would be

$$25^2 R - 24^2 R = 49R \text{ watts.}$$

This finding is particularly noteworthy as the share of nonlinear loads continues to grow in commercial buildings.

Table 5: Estimated aggregate savings from PFC in desktop computers

		US	CA
Population 2005	million	296	36
Residential stock of desktop PCs 2005	million	85	10.4
Commercial building floor area	B sf	72	Not Available
Commercial stock of desktop PCs	million	80	9.8
80 PLUS Savings per computer (residential)	kWh/year	82	82
80 PLUS Savings per computer (commercial)	kWh/year	90	90
Additional savings from PFC (residential)	%	11.9%	11.9%
Additional savings from PFC (commercial)	%	21.4%	21.4%
Additional savings from previously uncounted line loss savings from 80 PLUS (residential)	%	3.3%	3.3%
Additional savings from previously uncounted line loss savings from 80 PLUS (commercial)	%	6.1%	6.1%
Additional savings from PFC per computer (residential)	kWh/year	10	10
Additional savings from PFC per computer (commercial)	kWh/year	19	19
Additional savings from previously uncounted line loss savings from 80 PLUS (residential)	kWh/year	3	3
Additional savings from previously uncounted line loss savings from 80 PLUS (commercial)	kWh/year	6	6
Additional savings from PFC (residential)	MkWh/year	829	101
Additional savings from PFC (commercial)	MkWh/year	1537	187
Additional savings from previously uncounted line loss savings from 80 PLUS (residential)	MkWh/year	228	28
Additional savings from previously uncounted line loss savings from 80 PLUS (commercial)	MkWh/year	441	54

(1) Population statistics taken from US Census (http://www.census.gov/popest/states/NST-ann-est.html) for July 1, 2005.

(2) # of residential PCs take from Roth et al (2005)[8]. The # of residential PCs is scaled assuming CA population owns PCs in the same proportions as US population.
(3) Laptop PCs not included in PC stocks.
(4) US Commercial PC stocks are estimates based on work by Roth et al (2002)[9]. CA numbers scaled from US using population.
(5) Electricity savings from 80 PLUS power supplies from http://www.80plus.org/utlmrkt/energytables.html
(6) PFC % savings assume 100 foot cable length for commercial applications and 40 ft cable length for residential. These savings do not yet include additional savings from the transformer and cables to and from that transformer that amount to about another 1/3 increase in the savings.
(7) Aggregate savings estimates assume instantaneous replacement of all current desktop power supplies with 80 PLUS versions. These estimates also assume zero current market penetration of 80 plus (program penetration into new sales by year end 2006 will likely be about 5% of new computers sold according to Matthew Clark of ECOS consulting (personal email communication, 7 Feb 06)).

Non-Energy Benefits of PFC

In previous sections we saw many problems caused by harmonics in power distribution systems. In this section we will explore solutions to those problems. The specific benefit of PFC will be the avoidance of using these solutions, thus enabling better use of the existing power system.

Solutions and Application Issues

Using Figure 3 as an example, different solutions can be outlined and the merits of each discussed. There are two approaches to these solutions: (1) adjust the circuit parameters such that the customer can tolerate the harmonic levels present and (2) make adjustments at or near the offending load to reduce the harmonics to tolerable levels. This second approach usually involves filtering the current. In cases where filtering is applicable, the filters may be applied at various locations. These locations and their merits will be discussed separately.

---

[8] Roth, Kurt, Ratcharit Ponoum, and Fred Goldstein. 2005. *Scenario-Based Projections of Residential Office and Telecommunications Equipment Energy Consumption in 2005 and 2010*. Cambridge, MA: Prepared by Tiax for the U.S. Department of Energy. Tiax Reference no. D0295. October (Draft Final Report).

[9] Roth, Kurt, Fred Goldstein, and Jonathan Kleinman. 2002. *Energy Consumption by Office and Telecommunications Equipment in Commercial Buildings--Volume I: Energy Consumption Baseline*. Washington, DC: Prepared by Arthur D. Little for the U.S. Department of Energy. A.D. Little Reference no. 72895-00. January. (http://www.eren.doe.gov/buildings/documents)

Solutions

In the case of line losses and overloaded phase conductors, solutions include:

- larger conductors
- filters at various locations

For overloaded/overheated neutrals, solutions include:

- larger neutral wire
- double number of neutral conductors
- neutral for each phase
- third harmonic filters at loads
- third harmonic filter in neutral
- zigzag filter close to load
- active filter

For transformer heating, solutions include:

- derating transformer (larger transformer)
- applying K-rated transformer
- filters at various locations

For motor heating, solutions include:

- derating motor
- filters at various locations

For capacitor stress, solutions include:

- proper sizing of capacitors
- filters at various locations

For resonance issues, solutions include:

- filters at various locations
- de-tuning capacitor banks (creating filters)
- judicious choices of capacitor size and location

Filters at various locations can be further described as:

- filters at bus or panel level
  - series connected neutral current filter
  - parallel connected zigzag filter
  - parallel connected active power filter
- filters at loads
  - built-in types
- series inductor
- boost converter power factor correction
  - branch circuit or cord connection
- parallel connected resonant filter
- series connected resonant filter

- neutral current filter
- zigzag filter
- active filter
- choke upstream of motor drives
- passive 3-phase filter upstream of motor drives

Application Issues

Specific issues that should be considered when applying the solutions outlined above are discussed below. The first set of solutions discussed will be those that do not attempt to remove or attenuate harmonics,but rather just allow the system to live with them.

Solutions to help users better tolerate harmonics

Larger conductors

There are three possibilities:
- Replace the conductor with a larger one
- Pull another conductor in parallel
- Consider these problems in the initial design stage

Issues associated with an increase in conductor size include:
- Complying with the National Electric Code
- Making sure there is space in any raceway and at the cable terminals
- Considering the cost of installation

Larger Neutral

Considerations for larger neutrals are the same as for larger conductors.

Double Neutral

Considerations for double neutrals are the same as for larger conductors.

Separate Neutral/Phase

Considerations for separate neutrals are the same as for larger conductors.

Larger Transformer (Derated)

In order to derate a transformer after it is installed, limits must be placed on allowed future loading. In addition, loads may have to be removed and placed on some other source, so re-wiring may be required. If the transformer is being sized *before* installation, the current spectrum will be required in order to perform the derating.

K-rated Transformer

A K-rated transformer can be used to handle the expected harmonic currents if the transformer is being sized before installation. Again, this would require some knowledge of the harmonic spectrum of the expected current. Installing a K-rated transformer in place of an existing one may be cost prohibitive, and the derating approach above would be more cost-effective.

Derating Motors

Derating motors may only be necessary in extreme cases, as where the bus voltage is so distorted that it causes unacceptable heating in the windings. In order to accomplish this derating for a motor in operation, the loading must be reduced. If this is not possible, then a larger motor would be required.

Proper Sizing of Capacitors

This usually refers to PFC capacitors, so the burden may fall on the vendor who designs the capacitor bank. The issues here are to make sure that the capacitors are rated for the harmonic current they will have to carry. In addition, any background harmonic voltage present on the bus will contribute currents to the capacitor bank. Therefore, all these currents must be taken into account. Another issue is that of the dielectric stress that may be inflicted on the capacitors. Careful consideration must be taken of all background voltages present in order to avoid these conditions.

Detuning Capacitor Banks

This approach uses inductors in series with the capacitor bank to change the resonant frequency. As long as the resonant frequency is not near any predominant current components being injected by the load, there should not be any problem.

Careful Location of Capacitors

The location of the capacitors will have an impact on system resonance. If a resonant condition is expected or does occur, simply moving the capacitor bank can change the effective impedance seen by the nonlinear load. Carefully applied, this approach can change the resonant frequency to a frequency that is not present in the load current.

Solutions That Reduce Harmonics

Solutions that reduce harmonics typically involve filters, although the end device may be redesigned also. Since filters can be applied at many possible locations in the system, they will be considered by application as well as location.

- filters at bus or panel level
  - series connected neutral current filter

- parallel connected zigzag filter
- parallel or series connected active power filter

- filters at loads
  - built-in types
    - series inductor
    - boost converter power factor correction
  - branch circuit or cord connection
    - parallel connected resonant filter (PCRF)
    - series connected resonant filter (SCRF)
    - neutral current filter
    - zigzag filter
    - choke upstream of motor drives
    - passive 3-phase filter upstream of motor drives
    - active 3-phase filter upstream of motor drives
    - active front-end on motor drives

Zigzag Filter

A special zigzag , canceling-type, auto-transformer filter (ZZF) is practical in canceling triplen harmonic currents from single-phase loads. The ZZF employs a three-phase auto-transformer to cancel the triplen harmonic currents and reduce the upstream neutral currents. Because all the triplen harmonic currents (zero sequence currents) are added in the neutral and flowing from load-side back to source-side neutral, the parallel-connected, auto-transformer can provide a zero-sequence current path to trap and cancel the triplen harmonics.

Active Power Filter

Active power filters (APFs) can be applied at the load or at the panel level.

When an individual shunt or series filter is applied, interactions between the filter and the load must be considered. The most commonly used APF has been the shunt-type filter. However, the *shunt* filter is only effective to harmonic current sources, such as current source converters. On the other hand, the *series*-type APF is only effective to harmonic voltage sources, such as the rectifier-interfaced, voltage-source converters.

The reason for this restriction on the shunt active filter is that the impedance of the load must be much larger than that of the source in order to be effective. (This is not the case for diode rectifiers with filter capacitors downstream.) However, a choke of approximately 6% can be used to effect this impedance ratio. This will increase the effectiveness of the shunt filter for these loads.

In the case of the series active filter, the load impedance must be much smaller than that of the source to be effective. Therefore, the series filter can't be used for

controlled rectifiers with large DC inductance. However, if a passive filter is installed just upstream of the load, its effective impedance at the frequencies of interest will be much smaller than the source, and the series filter can be used.

Series Inductor Filter

An inductor in series with the PC power supply can restrict sudden changes in current, smoothing out the waveform and reducing the peak value of current, as would any series impedance. The rectifier circuit operates in the same way, except the harmonic content and the peak current are reduced.

Boost Converter with PFC

The boost converter is also called a "step-up converter" which converts low dc voltage to high dc voltage. The inductor current can be controlled to follow a desired wave shape. In a PFC circuit, the inductor current is normally controlled to follow the rectified voltage, and the ac-side current will be in phase with the ac voltage.

Parallel Connected Resonant Filter

The parallel connected resonant filter (PCRF) is usually configured as a plug-in convenience outlet and serves 2 to 4 electronic devices. As such, it is used as a plug-and-play device that requires no engineering in its application. The impedance of this network is zero at resonance, thus it shunts the selected harmonic current back to its source, which is the load. As a result, the harmonic current is not injected into the source. The values of inductor and capacitor dictate the resonant frequency, so to filter third harmonics, the device is tuned to 180 Hz.

Series Connected Resonant Filter

Unlike the PCRF that traps the third harmonic current, the function of the series connected resonant filter (SCRF) is to block the third or other harmonic currents. With a typical rating of 6 amps, it is available as a plug-in filter that serves several other electronic devices. To block the third harmonic, the SCRF employs a single-tuned paralleled LC circuit whose impedance approaches infinity at the third harmonic frequency. The multi-tuned SCRF connects several tuned filters in series to block more harmonics. **Major Benefits of PFC Power Supplies**

Power supplies using PFC are, in general, using some variation of the Boost Converter with PFC, above. New applications using integrated circuits for controllers are becoming smaller and more cost-effective every year. In addition, they are more and more efficient so as not to affect the overall efficiency of the power supply. A summary of the main benefits of using PFC power supplies follows.

Elimination of Harmonics-Related Problems and Solutions

The science of harmonic compensation is well established, with many devices on the market. The use of PFC power supplies can eliminate the need for any of these devices in commercial buildings regarding single-phase nonlinear loads, such as computer power supplies. In fact, the time and effort used in performing the studies to determine the correct solution, along with the design of the solution, can also be avoided. One of the drawbacks of the solutions described here is the cost of implementation. Like many solutions, to design the solution into the device before it is shipped to the consumer is the best approach, yielding the lowest cost alternative. Harmonic correction devices are power conditioners. Experience with hundreds of power conditioning solutions has shown that when applying a technology to a customer power system, the large panel level solutions or even larger building level solutions can cost thousands or even tens or hundreds of thousands of dollars, while end-load solutions can be on the order of hundreds of dollars. The attractiveness of applying panel or building level solutions is that it requires fewer devices, and less analysis. On the other hand, not all devices on the circuit require conditioning, so the solution is usually much larger than necessary, providing power conditioning to more devices than required. Application of the solution at the end-load level allows much finer control over which devices are affected, as well as lower cost. If the solution is built into the product before purchase, no analysis is required to implement it in the system. For PFC power supplies, the cost is probably on the order of a few dollars (up to ten) per machine, so even for hundreds of machines, the solution will be easier and less costly to implement than applying harmonic filters in the power system.

Release of Kilovoltamperes

Another major benefit of using PFC power supplies is the release of kilovoltamperes (kVA) in the system. Since the total rms current is reduced, the kVA of the load is also reduced, which means that more load could be added without the need to increase the size of the infrastructure. Just like the use of power factor correction capacitors, the ability to carry more load without an increase in infrastructure is a major benefit of this solution.

Conclusions

The use of highly efficient power supplies in PCs can have a significant effect on the energy consumption in the state of California and the U.S. If those power supplies also use power factor correction, the reduction in energy consumption can be enhanced by nearly 300 million kWh per year, while for the United States, the value is close to 2.4 million kWh per year.

Electronic products drawing more than 75 watts are typically required to limit the harmonic content of their current. This usually means they will have to be power factor corrected for sale in Europe or Japan, according to IEC 61000-3-2 (see www.evaluationengineering.com/archive/articles/0900deal.htm). Comparable requirements do not yet exist in the United States, but electric utilities often encourage the sale of power factor corrected devices through their incentive and promotion programs for energy efficient equipment such as electronic ballasts. Our findings suggest that power factor correction provisions are also warranted for efficient computer specifications, because of the additional energy savings achievable in building distribution wiring. There are a number of technical means for coping with harmonics in building wiring once they have been created, but preventing the harmonics at the point of load minimizes the problem at the outset and could yield significant cost savings to utilities and their customers.

APPENDIX A – Calculations and Methodology

The benefits can be compared for the three cases as follows:

Let the subscript N signify values associated with the non-PFC case, while the subscript P signify values associated with the PFC case. Later we can use the subscript 8 to designate the 80-plus case.

Specifically,

- L_N = Cable loss for non-PFC
- L_P = Cable loss for PFC
- L_8 = Cable loss for 80 PLUS
- I_N = Current drawn by non-PFC
- I_P = Current drawn by PFC
- I_8 = Current drawn by 80 PLUS
- P_N = Power consumed by non-PFC
- P_P = Power consumed by PFC
- P_8 = Power consumed by 80 PLUS
- B_P = Benefit from using PFC
- B_8 = Benefit from using 80 PLUS
- P_{NDC} = DC power at non-PFC output
- P_{PDC} = DC power at PFC output
- P_{8DC} = DC power at 80 PLUS output
- η_N = Efficiency of non-PFC
- η_P = Efficiency of PFC
- η_8 = Efficiency of 80 PLUS

Consider that:

$$L_N = I_N{}^2 R$$

$$L_P = I_P{}^2 R$$

The benefit in going from non-PFC to PFC includes a term for cable losses and one for the improvement in efficiency:

$$B_{Pcable} = L_N - L_P = R(I_N{}^2 - I_P{}^2)$$

$$B_{Pefficiency} = P_N - P_P$$

It should be noted that the benefit arising from the reduction in cable losses will be due, in part, to the reduction in current due to PFC, but that the improvement in efficiency will also result in a reduction in current. Therefore, the first equation will actually involve effects from both. These effects will be separated in the following discussion.

Since

$$\eta_P = {P_{PDC}}/{P_P}$$

And

$$\eta_N = {P_{NDC}}/{P_N}$$

Then, since

$$P_{PDC} = P_{NDC}$$

We can write

$$\left[{P_P}/{P_N} \right] = {\eta_N}/{\eta_P}$$

And

$$P_P = P_N \, {\eta_N}/{\eta_P}$$

Now consider

$$I_N = {P_N}/{V_N PF_N}$$

$$I_P = {P_P}/{V_P PF_P}$$

$$\frac{I_P{}^2}{I_N{}^2} = \left(\frac{P_P V_N PF_N}{P_N V_P PF_P} \right)^2$$

And

$$I_P{}^2 = I_N{}^2 \left(\frac{P_P V_N PF_N}{P_N V_P PF_P} \right)^2$$

Let

$$\beta = \left(\frac{P_P V_N PF_N}{P_N V_P PF_P} \right)^2$$

then

$$I_P{}^2 = I_N{}^2 \beta$$

$$RI_P{}^2 = RI_N{}^2 \beta$$

$$L_P = L_N \beta$$

We can write

$$B_P = (L_N - L_P) + (P_N - P_P)$$

$$B_P = (L_N - L_N \beta) + \left(P_N - P_N \, \eta_N / \eta_P \right)$$

$$B_P = \underbrace{L_N (1 - \beta)}_{cable} + \underbrace{P_N \left(1 - \eta_N / \eta_P \right)}_{efficiency}$$

It should be noted that the first term, involving L_N is associated with the cable losses, while the second term involving P_N is associated with the improvement in efficiency. It is informative to take a closer look at the term

$$\beta = \left(\frac{P_P V_N PF_N}{P_N V_P PF_P} \right)^2 .$$

If we write this as

$$\beta = \underbrace{\left(\frac{P_P V_N}{P_N V_P}\right)^2}_{efficiency} \underbrace{\left(\frac{PF_N}{PF_P}\right)^2}_{PFC}$$

it is evident that the first term in parentheses is the change in cable loss due to improvement in efficiency, while the second term is the change due to PFC.

For purposes of comparison, if the power factor is not corrected, then the second term remains unity; and the only effect on the benefit is that of the efficiency improvement. If, however, the power factor is also corrected, then both terms come into play, and the benefit will be increased.

A numerical example will help to illustrate:

$$B_P = \underbrace{L_N(1-\beta)}_{cable} + \underbrace{P_N\left(1 - \eta_N / \eta_P\right)}_{efficiency}$$

Here, $L_N = 56.7$ and $P_N = 1054.2$. The efficiencies η_N and η_P can be calculated as 73.61% and 76.76%, respectively. Voltages were measured at the loads as $V_N = 117.81$ and $V_P = 118.76$. Next we compute

$$\beta = \underbrace{\left(\frac{P_P V_N}{P_N V_P}\right)^2}_{efficiency} \underbrace{\left(\frac{PF_N}{PF_P}\right)^2}_{PFC} = \left[\frac{(1010.9)(117.81)}{(1054.2)(118.76)}\right]^2 \left[\frac{.745}{.994}\right]^2 = (0.9048)(0.5617) = 0.5083$$

So the benefit for this case is found as

$$B_P = \underbrace{56.7(1-0.5083)}_{cable} + \underbrace{1054.2\left(1 - 0.736/0.768\right)}_{efficiency} = 27.88 + 43.93 = 71.81$$

It is very important to remember that the first term of the *benefit* expression is associated with savings in the cable that are a result of both efficiency and the PFC. Note that for this example, the cable savings is nearly 28 W. If the PFC were not included, however, the cable term would only be 5.4 W. These values will be tabulated and shown graphically later to illustrate the value of using PFC in the power supply design.

The next case examines the 80 PLUS power supply. The equation for the benefit is the same, but the variables will change for all those with subscript P to those with subscript 8 – this means B_P, P_P, V_P, PF_P and η_P will be replaced by B_8, P_8, V_8, PF_8 and η_8.

So β can be calculated as

$$\beta = \underbrace{\left(\frac{P_8 V_N}{P_N V_8}\right)^2}_{efficiency} \underbrace{\left(\frac{PF_N}{PF_8}\right)^2}_{PFC} = \left[\frac{(875.1)(117.81)}{(1054.2)(119.12)}\right]^2 \left[\frac{.745}{.995}\right]^2 = (0.6740)(0.5606) = 0.3779$$

And now the benefit becomes

$$B_8 = \underbrace{56.7(1-0.3779)}_{cable} + \underbrace{1054.2\left(1 - {}^{0.736}\!/_{0.887}\right)}_{efficiency} = 35.27 + 179.46 = 214.7$$

Effect of Cable Length

Increasing the length of building distribution wiring also has a significant impact on wiring losses and power factor impacts. The Tables 2-6 show these results for runs of 40, 60, 80, 100 and 200 ft.

Table A1: Test Results with 40 ft. Cable

				Units	NPFC	PFC	80+
Input Data							
Power Supply Efficiency				%	73.48%	76.79	89.07%
Input Voltage				V	118.94	119.31	119.92
Power Factor				%	74.50%	99.4	100.00%
Input Current				Amps	11.92	8.52	7.30
Power Input at Source				Watts	1087.20	1025.90	881.9
Power Input at Power Supply Load				Watts	1056	1010.5	871.2
Losses in Cable				Watts	31.2	15.40	10.7
Savings Relative to NPFC Case							
Total Savings **Measured**				Watts	NA	61.30	205.30
The Values Below are Calculated Values							
Calculated Direct Power Supply Load Savings				Watts	NA	45.52	184.84
Calculated Cable Savings from Power Supply Lo				Watts	NA	2.8	5.72
Calculated Cable Savings from PFC				Watts	NA	13.6735	13.88
Total Calculated Savings				Watts	NA	61.99353	204.45
Savings Expressed as a Percentage of Direct Power Supply Savings							
Direct Power Supply Load Savings					NA	100.00%	100%
Cable Savings from Power Supply Load Savings					NA	6.15%	3%
Cable Savings from PFC					NA	30.0%	8%

Table A2: Test Results with 60 ft. Cable

	Units	NPFC	PFC	80+
Input Data				
Power Supply Efficiency	%	73.54%	76.85	89.02%
Input Voltage	V	119.08	120.15	120.72
Power Factor	%	74.99%	99.4	100.00%
Input Current	Amps	11.82	8.43	7.37
Power Input at Source	Watts	1094.90	1029.60	885.6
Power Input at Power Supply Load	Watts	1055.2	1009.8	871.4
Losses in Cable	Watts	39.7	19.80	14.2
Savings Relative to NPFC Case				
Total Savings **Measured**			65.30	209.30
The Values Below are Calculated Values				
Direct Power Supply Load Savings	Watts	NA	45.45	183.49
Cable Savings from Power Supply Load Savings	Watts	NA	4.2	7.50
Cable Savings from PFC	Watts	NA	17.1044	17.37
Total Calculated Savings	Watts	NA	66.75437	208.37
Savings Expressed as a Percentage of Direct Power Supply Savings				
Direct Power Supply Load Savings		NA	100.00%	100%
Cable Savings from Power Supply Load Savings		NA	9.24%	4%
Cable Savings from PFC		NA	37.63%	9%

Table A3: Test Results with 80 ft. Cable

	Units	NPFC	PFC	80+
Input Data				
Power Supply Efficiency	%	73.53%	76.78%	89.05%
Input Voltage	V	118.29	119.43	119.75
Power Factor	%	75.90%	99.40%	100.00%
Input Current	Amps	11.75	8.52	7.39
Power Input at Source	Watts	1104.30	1035.10	888.8
Power Input at Power Supply Load	Watts	1055.4	1010.7	871.4
Losses in Cable	Watts	48.9	24.40	17.4
Savings Relative to NPFC Case				
Total Savings **Measured**			69.20	215.50
The Values Below are Calculated Values				
Direct Power Supply Load Savings	Watts	NA	44.67	183.93
Cable Savings from Power Supply Load Saving	Watts	NA	4.9	9.43
Cable Savings from PFC	Watts	NA	20.3885	20.73
Total Calculated Savings	Watts	NA	69.95853	214.09
Savings Expressed as a Percentage of Direct Power Supply Savings				
Direct Power Supply Load Savings		NA	100.00%	100%
Cable Savings from Power Supply Load Savings		NA	10.97%	5%
Cable Savings from PFC		NA	45.64%	11%

Table A4: Test Results with 100 ft. Cable

				Units	NPFC	PFC	80+
Input Data							
Power Supply Efficiency				%	73.61%	76.76%	88.68%
Input Voltage				V	117.81	118.76	119.12
Power Factor				%	74.50%	99.40%	99.50%
Input Current				Amps	11.78	8.56	7.41
Power Input at Source				Watts	1110.90	1040.00	897
Power Input at Power Supply Load				Watts	1054.2	1010.9	875.1
Losses in Cable				Watts	56.7	29.10	21.9
Savings Relative to NPFC Case							
Total Savings **Measured**						70.90	213.90
The Values Below are Calculated Values							
Direct Power Supply Load Savings				Watts	NA	43.26	179.15
Cable Savings from Power Supply Load Saving				Watts	NA	5.39	10.36
Cable Savings from PFC				Watts	NA	24.849	24.91
Total Calculated Savings				Watts	NA	73.49902	214.43
Savings Expressed as a Percentage of Direct Power Supply Savings							
Direct Power Supply Load Savings					NA	100.00%	100%
Cable Savings from Power Supply Load Savings					NA	12.46%	6%
Cable Savings from PFC					NA	57.44%	14%

Table A5: Test Results with 200 ft. Cable

				Units	NPFC	PFC	80+
Input Data							
Power Supply Efficiency				%	73.58%	76.63%	88.91%
Input Voltage				V	114.26	115.51	115.94
Power Factor				%	0.78%	99.50%	100.00%
Input Current				Amps	11.88	8.82	7.57
Power Input at Source				Watts	1157.60	1068.70	911.9
Power Input at Power Supply Load				Watts	1054.7	1012.6	872.8
Losses in Cable				Watts	102.9	56.1	39.1
Savings Relative to NPFC Case							
Total Savings **Measured**						88.90	245.70
The Values Below are Calculated Values							
Direct Power Supply Load Savings				Watts	NA	41.98	181.84
Cable Savings from Power Supply Load Saving				Watts	NA	10.09	20.80
Cable Savings from PFC				Watts	NA	40.1504	40.78
Total Calculated Savings				Watts	NA	92.22036	243.42
Savings Expressed as a Percentage of Direct Power Supply Savings							
Direct Power Supply Load Savings					NA	100.00%	100%
Cable Savings from Power Supply Load Savings					NA	24.04%	11%
Cable Savings from PFC					NA	95.64%	22%